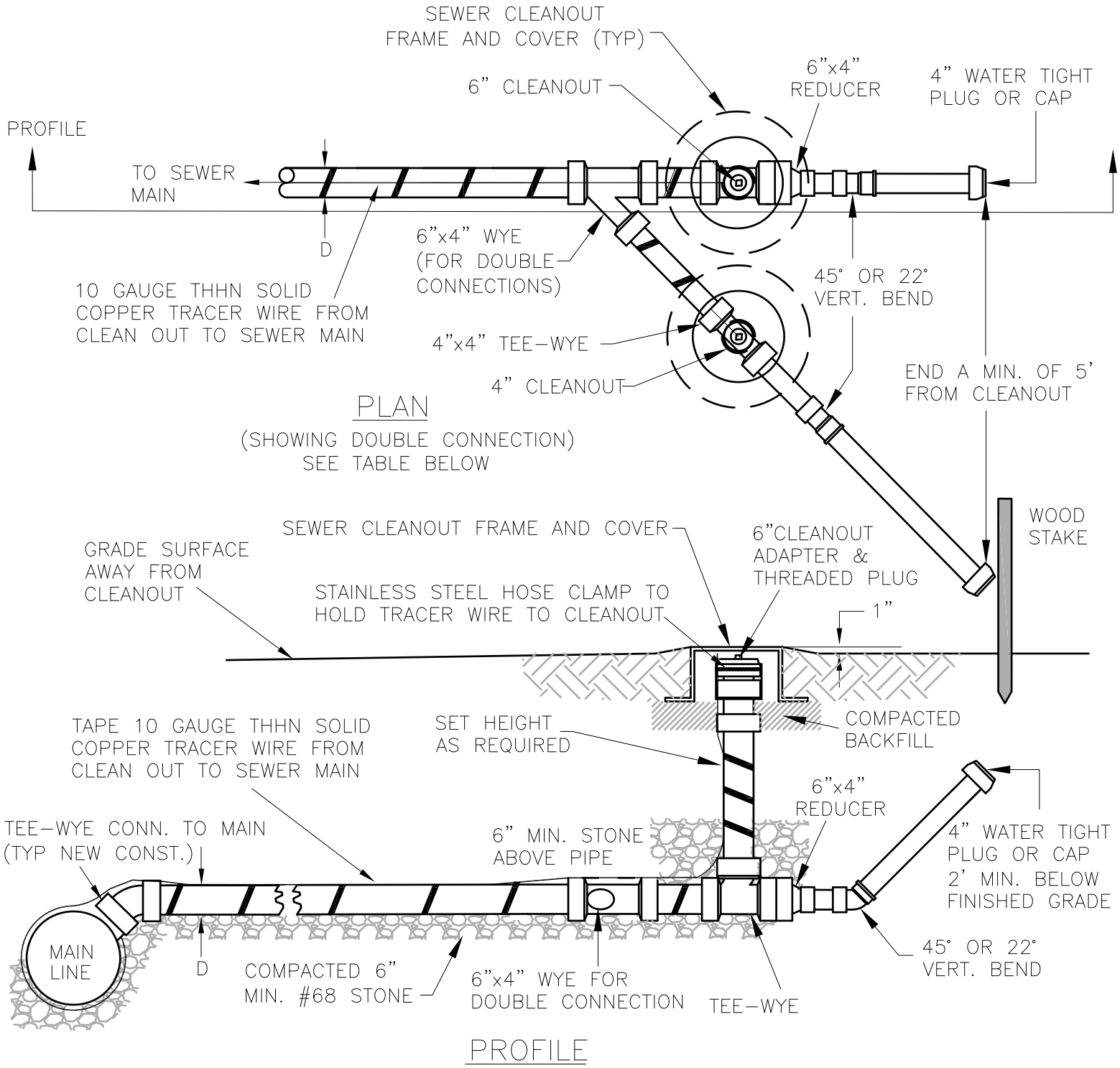

LATERAL DIAMETER, D	ALLOWABLE NUMBER OF CONNECTIONS TO BE SERVED
4"	1
6"	2

NOTES:

1. TRACER WIRE SHALL BE PLACED FOR EACH CONNECTION AND FOR ANY MAINLINE OR SIDEWALK COLLECTOR THAT DOES NOT TERMINATE WITH A MANHOLE. TRACER WIRE SHALL BE PLACED WITH ACSA INSPECTION OVERSIGHT (PRIOR TO BACKFILL).
2. SLOPE NOT LESS THAN 1% UNLESS APPROVED BY ACSA.

AUGUSTA COUNTY SERVICE AUTHORITY
VERONA, VIRGINIA

SCALE: NTS	DRAWN BY: ACSA
DATE: APRIL 2005	REVISED: APRIL 2021

TYPICAL RESIDENTIAL SERVICE CONNECTION DEEPER THAN 8'

DRAWING NUMBER: *S-2B*	PAGE: *1 OF 1*